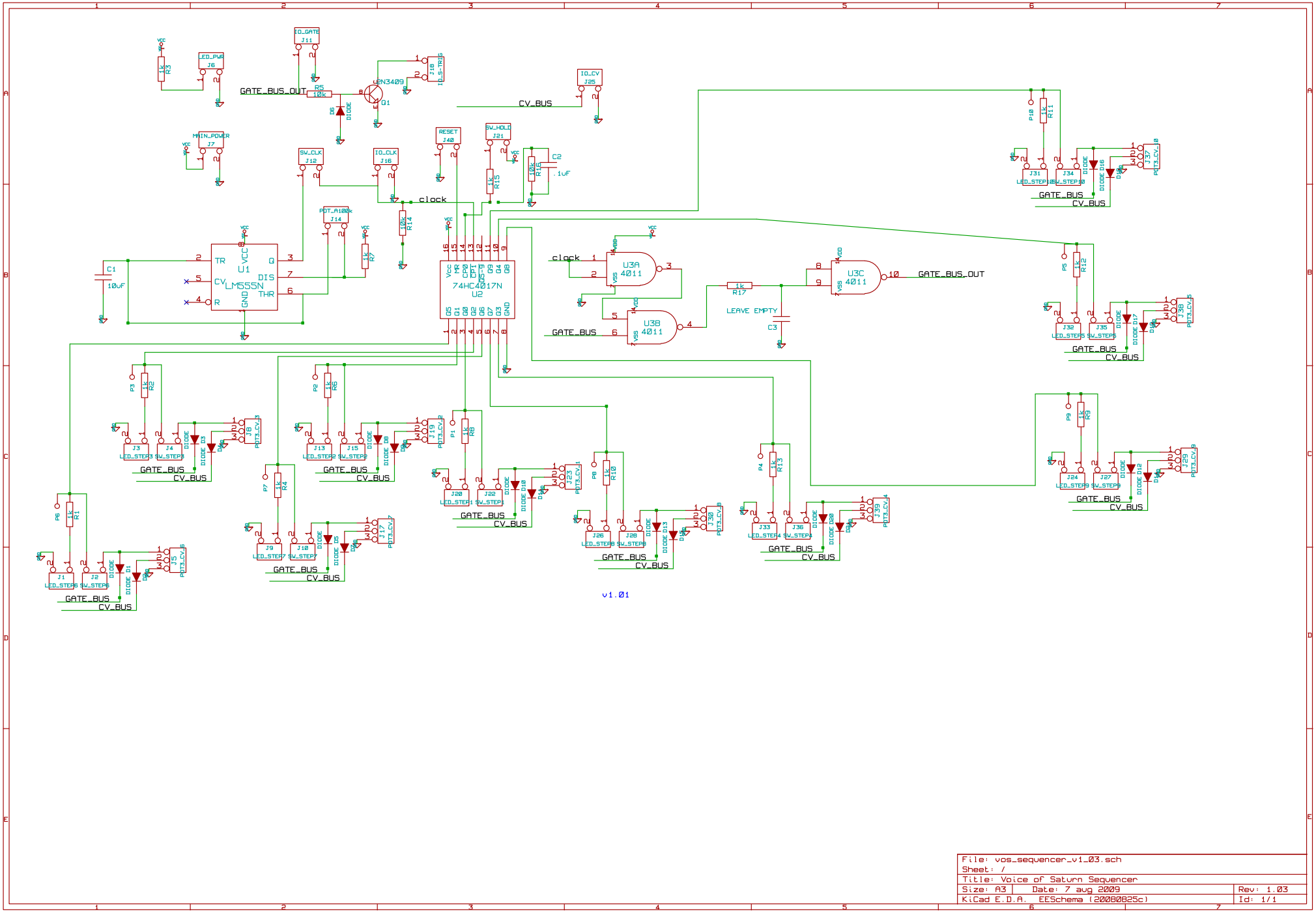

File: vos_sequencer_v1_03.sch		
Sheet: /		
Title: Voice of Saturn Sequencer		
Size: A3	Date: 7 aug 2009	Rev: 1.03
KiCad E.D.A. EESchema (20080825c)		Id: 1/1